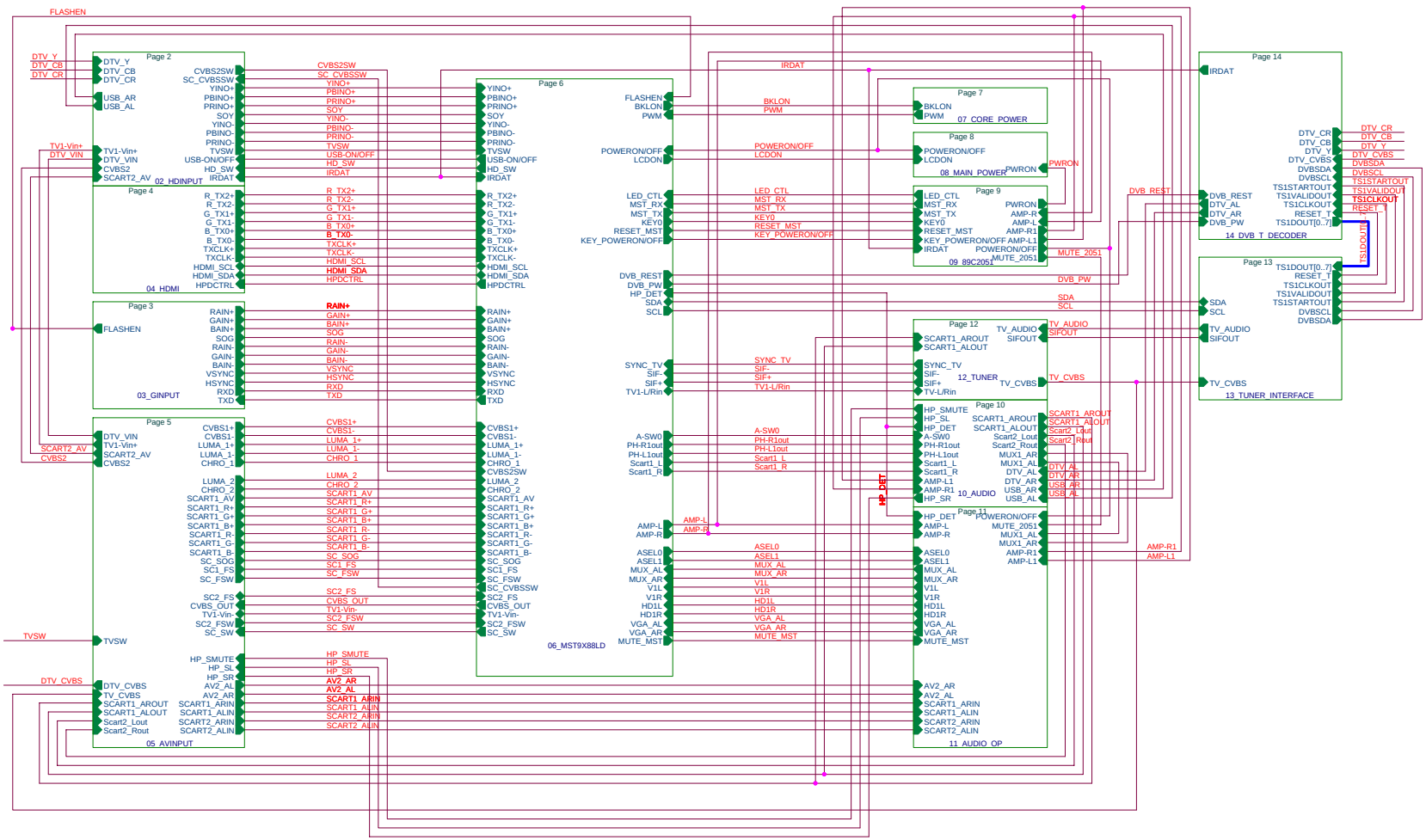

DESIGN:	MODEL: TV3201	TITLE:TOP
CHECKED:	PART NO.:	DWG NO.:
APPRD:	SHEET: 1 OF 15	VER:1.0

MULTIMEDIA CO.,LTD

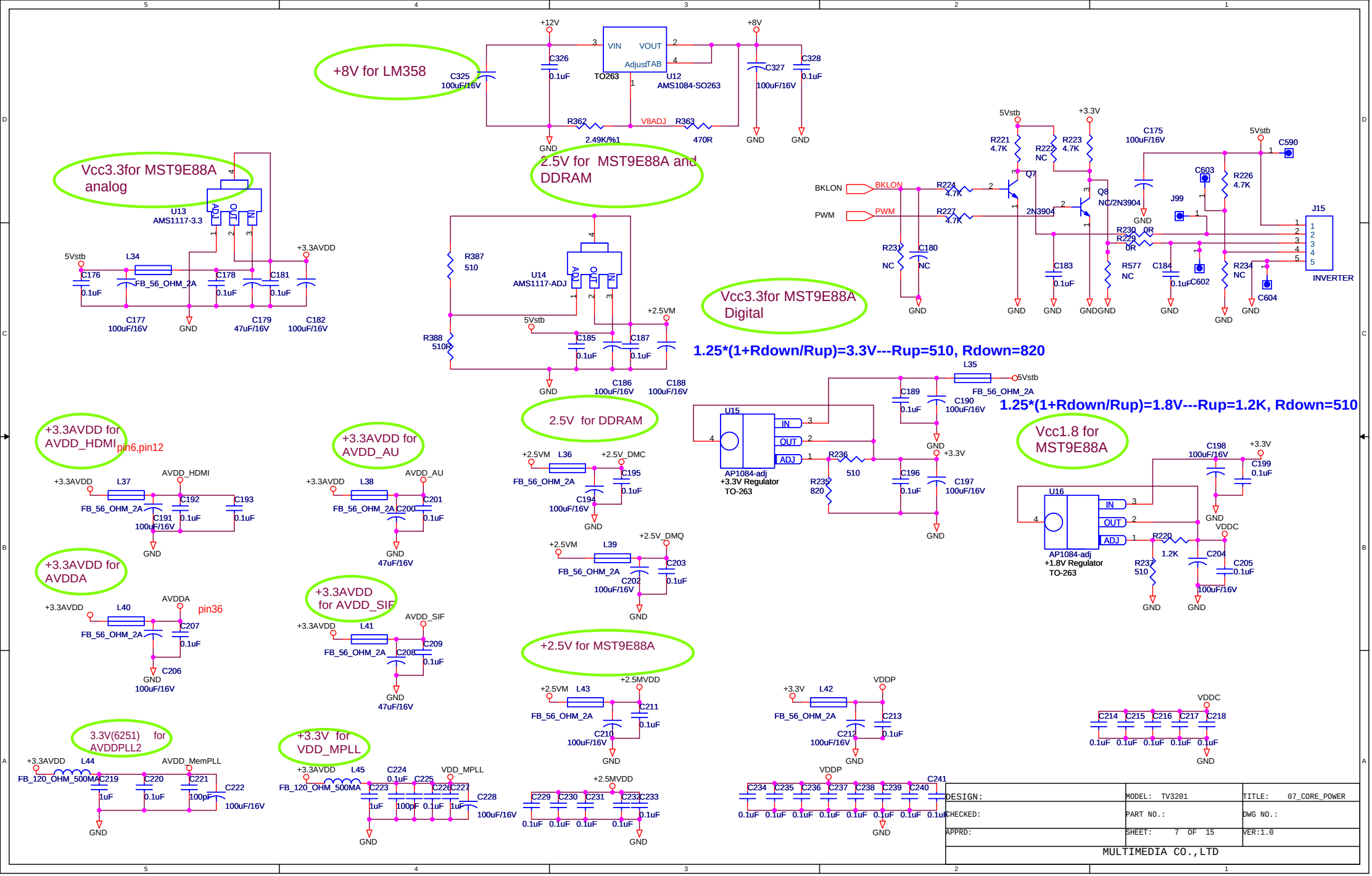
+8V for LM358
+12V
VIN
VOUT
AdjustTAB
TO263
U12
AMS1084-SO263
+8V
C325
100uF/16V
C326
0.1uF
C327
100uF/16V
C328
0.1uF
R362
2.49K/%1
V8ADJ
R363
470R
GND
Vcc3.3for MST9E88A analog
U13
AMS1117-3.3
5Vstb
L34
FB_56_OHM_2A
C176
0.1uF
C178
0.1uF
C181
0.1uF
+3.3AVDD
C177
100uF/16V
C179
47uF/16V
C182
100uF/16V
2.5V for MST9E88A and DDRAM
R387
510
U14
AMS1117-ADJ
R388
510R
C185
0.1uF
C187
0.1uF
+2.5VM
C186
100uF/16V
C188
100uF/16V
Vcc3.3for MST9E88A Digital
BKLON
PWM
R221
4.7K
R222
NC
R223
4.7K
+3.3V
C175
100uF/16V
5Vstb
C590
Q7
2N3904
Q8
NC/2N3904
R224
4.7K
R227
4.7K
R226
4.7K
C603
J99
J15
INVERTER
R230
0R
R229
0R
R231
NC
C180
NC
C183
0.1uF
R577
NC
C184
0.1uF
C602
R234
NC
C604
1.25*(1+Rdown/Rup)=3.3V---Rup=510, Rdown=820
L35
FB_56_OHM_2A
C189
0.1uF
C190
100uF/16V
1.25*(1+Rdown/Rup)=1.8V---Rup=1.2K, Rdown=510
U15
AP1084-adj
+3.3V Regulator
TO-263
IN
OUT
ADJ
R236
510
R235
820
C196
0.1uF
C197
100uF/16V
+3.3V
+3.3AVDD for AVDD_HDMI
pin6,pin12
AVDD_HDMI
L37
C192
0.1uF
C193
0.1uF
C191
100uF/16V
+3.3AVDD for AVDD_AU
AVDD_AU
L38
C200
0.1uF
C201
0.1uF
47uF/16V
2.5V for DDRAM
+2.5VM
L36
+2.5V_DMC
C195
0.1uF
C194
100uF/16V
+2.5V_DMQ
L39
C203
0.1uF
C202
100uF/16V
Vcc1.8 for MST9E88A
C198
100uF/16V
C199
0.1uF
U16
AP1084-adj
+1.8V Regulator
TO-263
R220
1.2K
R237
510
C204
C205
0.1uF
100uF/16V
VDDC
+3.3AVDD for AVDDA
AVDDA
L40
pin36
C207
0.1uF
C206
100uF/16V
+3.3AVDD for AVDD_SIF
AVDD_SIF
L41
C208
0.1uF
C209
0.1uF
47uF/16V
+2.5V for MST9E88A
L43
+2.5MVDD
C211
0.1uF
C210
100uF/16V
L42
VDDP
C213
0.1uF
C212
100uF/16V
C214
C215
C216
C217
C218
0.1uF
3.3V(6251) for AVDDPLL2
L44
AVDD_MemPLL
FB_120_OHM_500MA
C219
1uF
C220
0.1uF
C221
100pF
C222
100uF/16V
+3.3V for VDD_MPLL
L45
VDD_MPLL
C224
0.1uF
C225
C223
1uF
100pF
0.1uF
C226
C227
1uF
C228
100uF/16V
C229
C230
C231
C232
C233
C234
C235
C236
C237
C238
C239
C240
C241
DESIGN:
MODEL: TV3201
TITLE: 07_CORE_POWER
CHECKED:
PART NO.:
DWG NO.:
APPRD:
SHEET: 7 OF 15
VER:1.0
MULTIMEDIA CO.,LTD

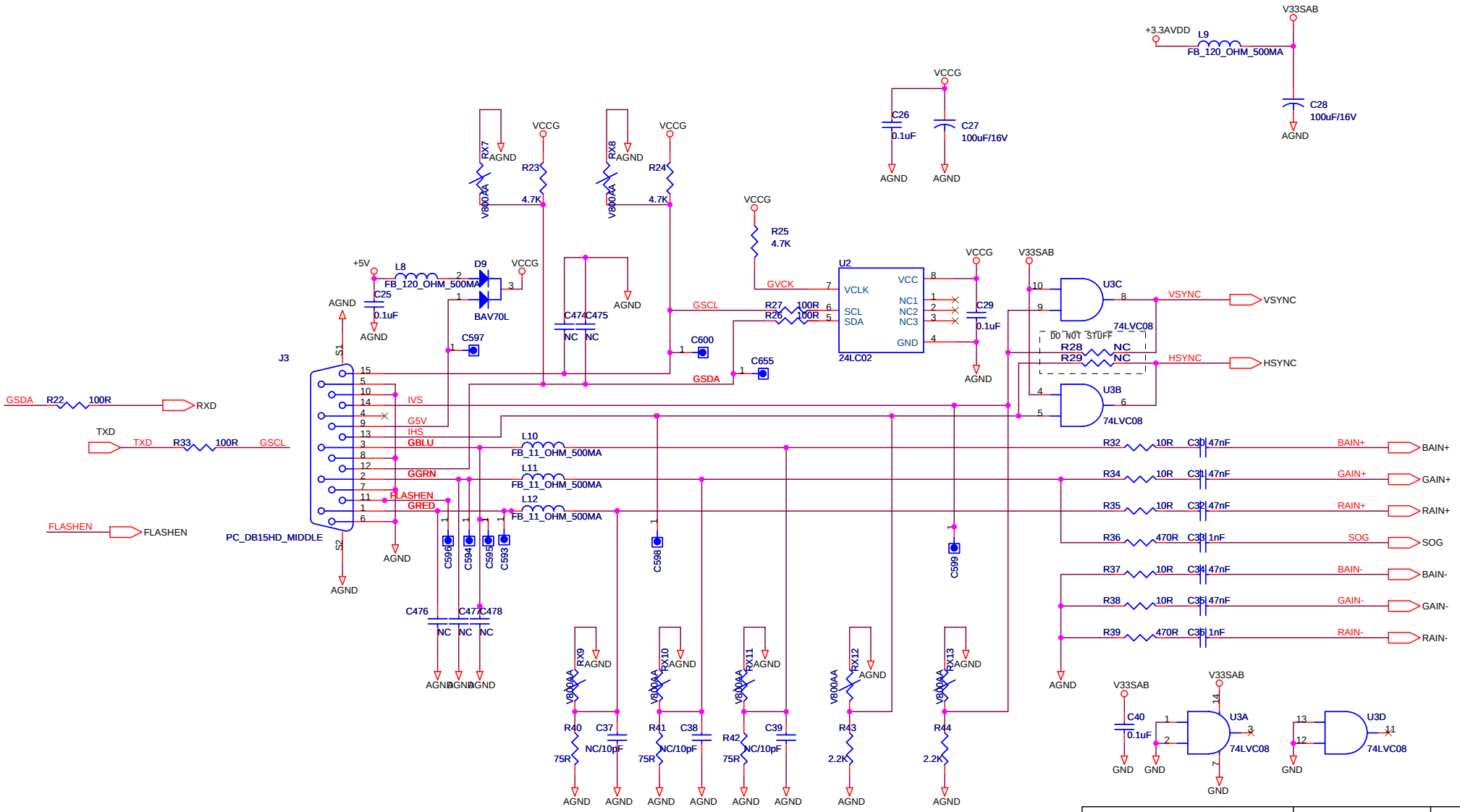

DESIGN:	MODEL: TV3201	TITLE: 03_GINPUT
CHECKED:	PART NO.:	DWG NO.:
APPRD:	SHEET: 3 OF 15	VER:1.0

MULTIMEDIA CO.,LTD

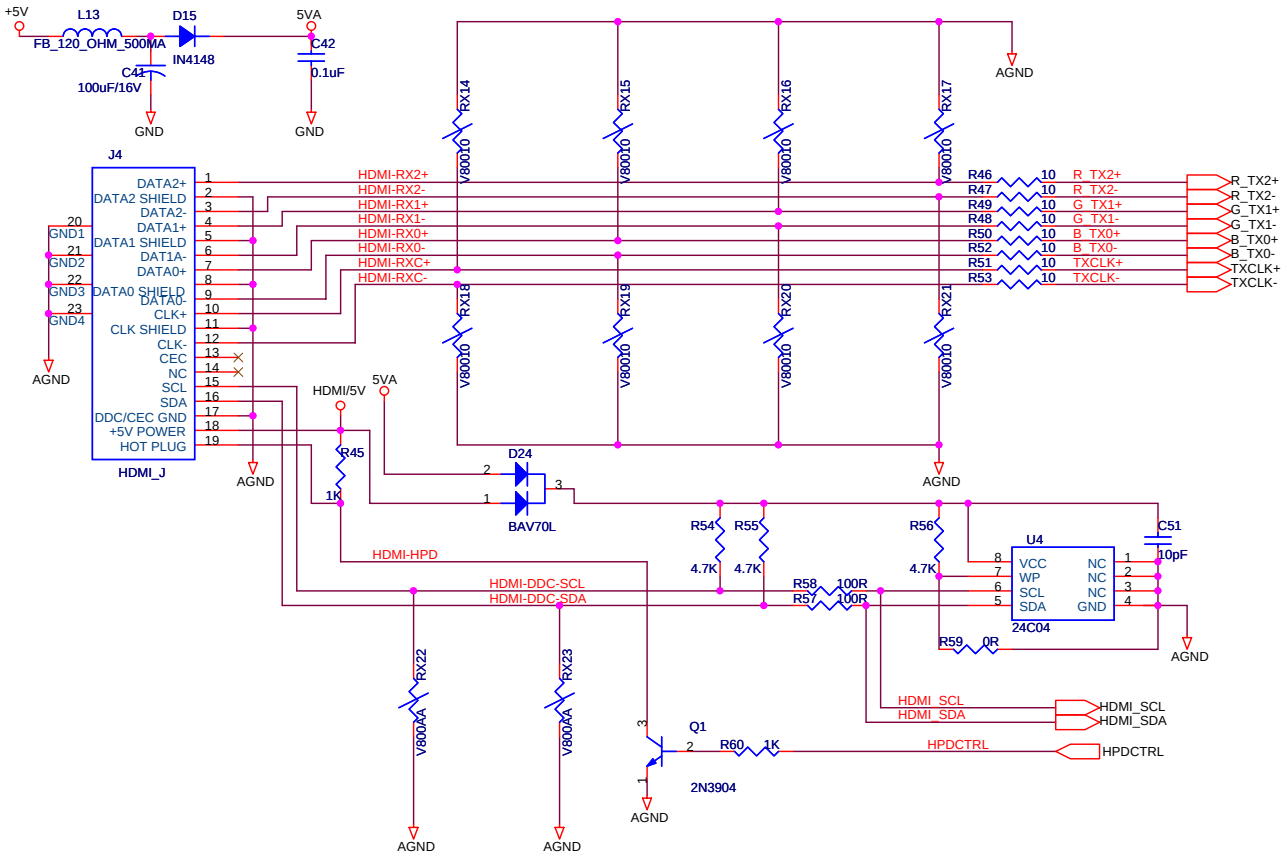

DESIGN:	MODEL: TV3201	TITLE: 04_HDMI
CHECKED:	PART NO.:	DWG NO.:
APPRD:	SHEET: 4 OF 15	VER:1.0
MULTIMEDIA CO.,LTD		

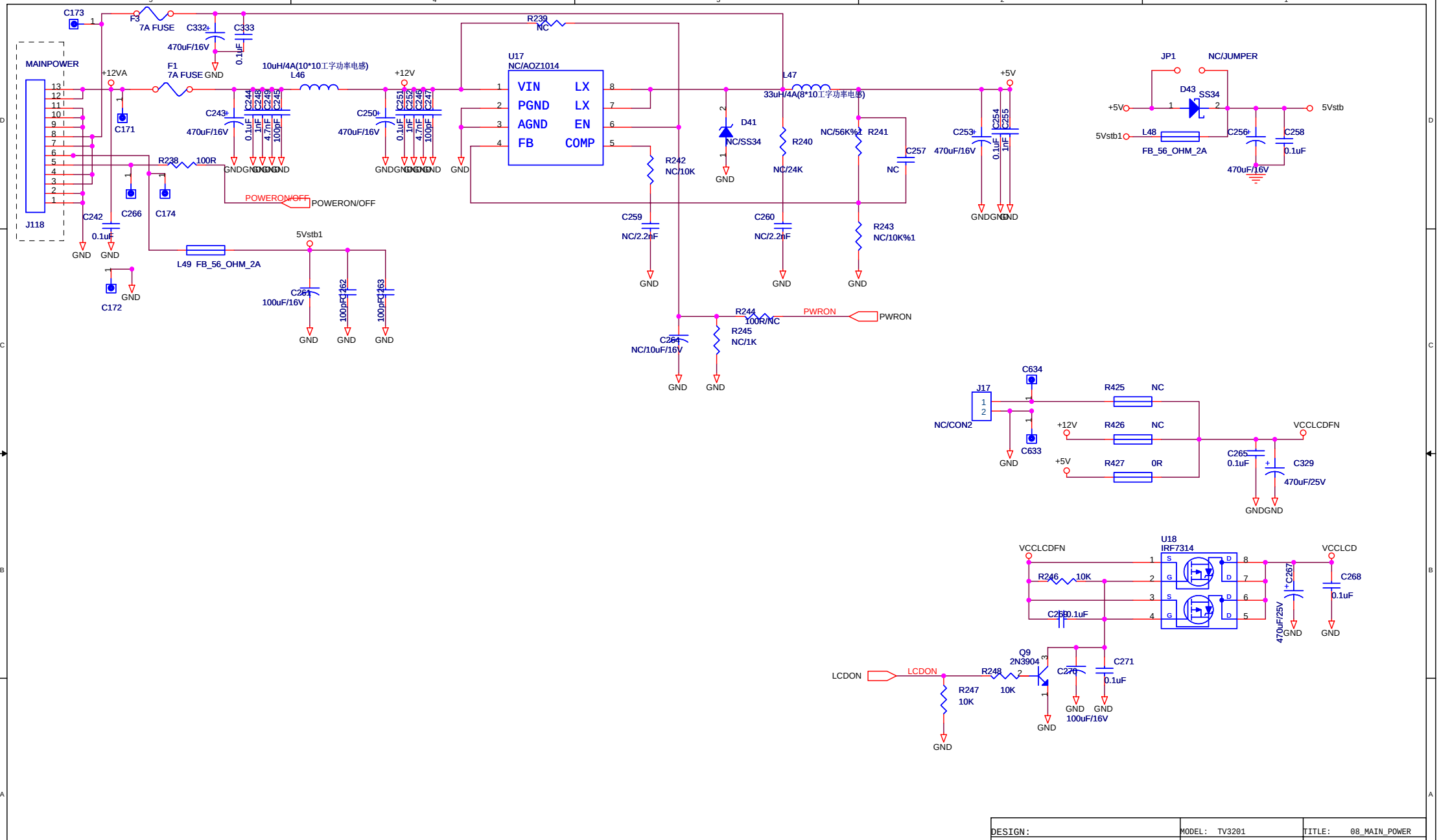

DESIGN:	MODEL: TV3201	TITLE: 08_MAIN_POWER
CHECKED:	PART NO.:	DWG NO.:
APPRD:	SHEET: 8 OF 15	VER:1.0
MULTIMEDIA CO.,LTD		

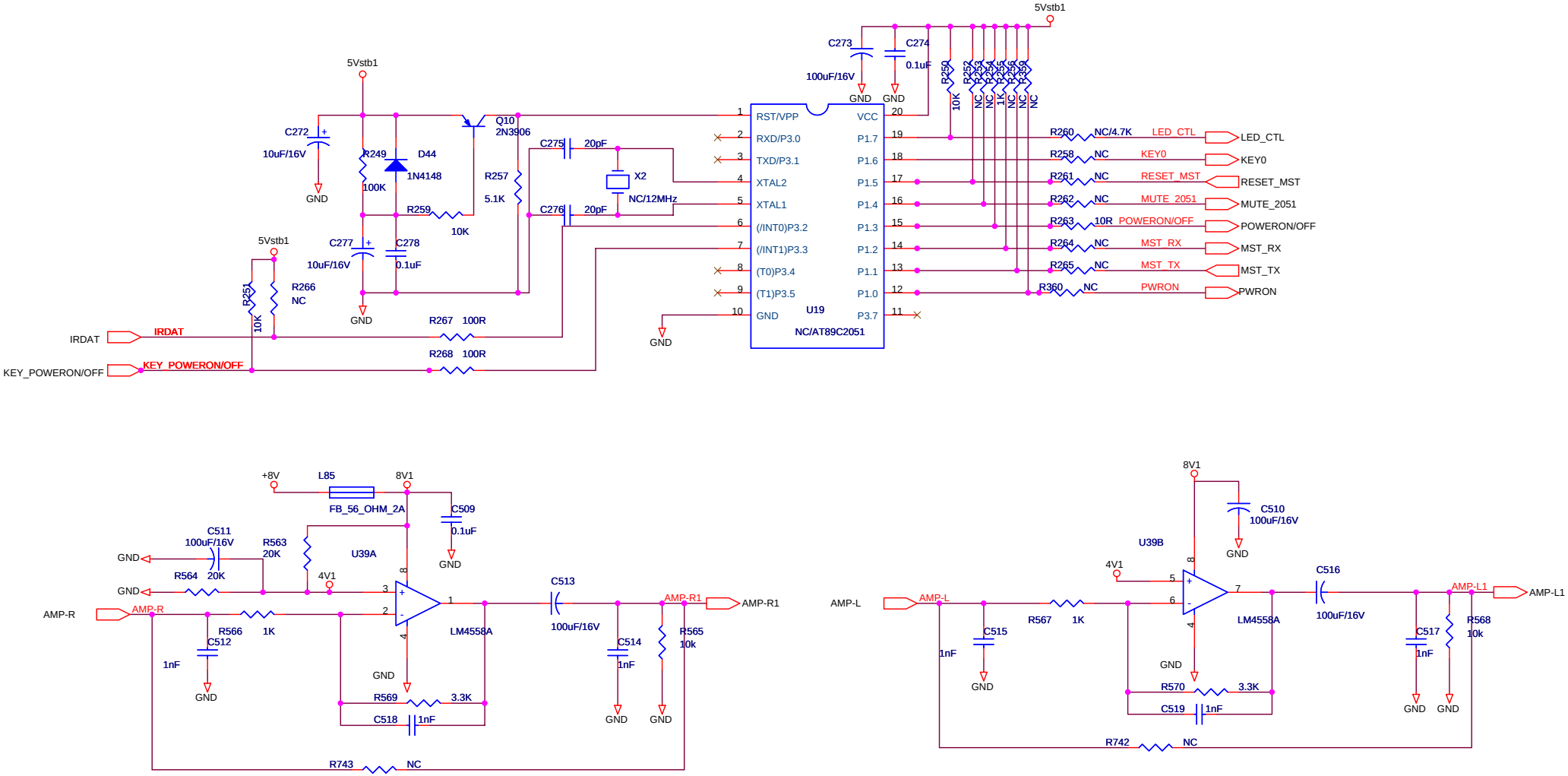

DESIGN:	MODEL: TV3201	TITLE: 09_89C2051
CHECKED:	PART NO.:	DWG NO.:
APPRD:	SHEET: 9 OF 15	VER:1.0
MULTIMEDIA CO.,LTD		

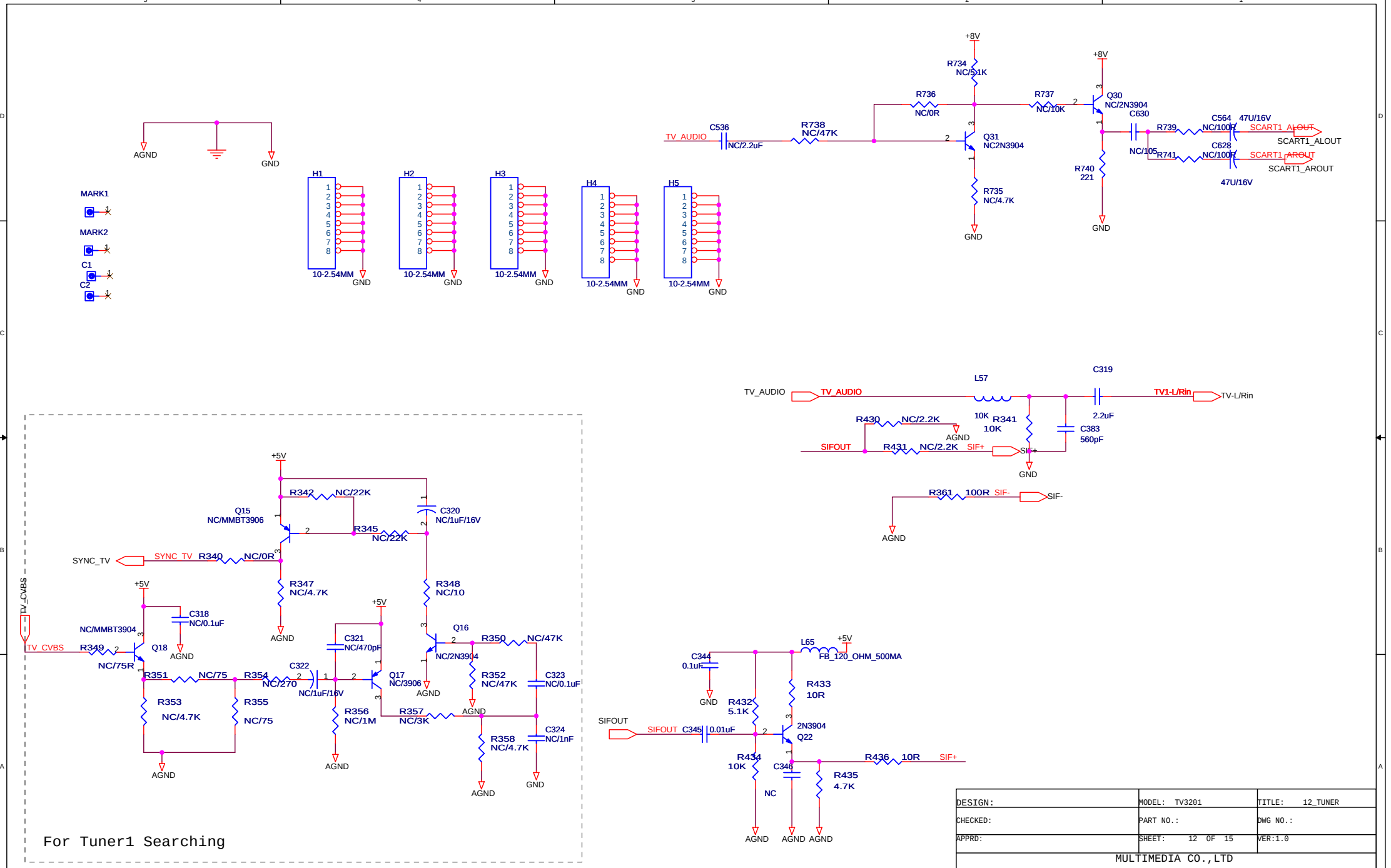

DESIGN:	MODEL: TV3201	TITLE: 12_TUNER
CHECKED:	PART NO.:	DWG NO.:
APPRD:	SHEET: 12 OF 15	VER:1.0
MULTIMEDIA CO.,LTD		

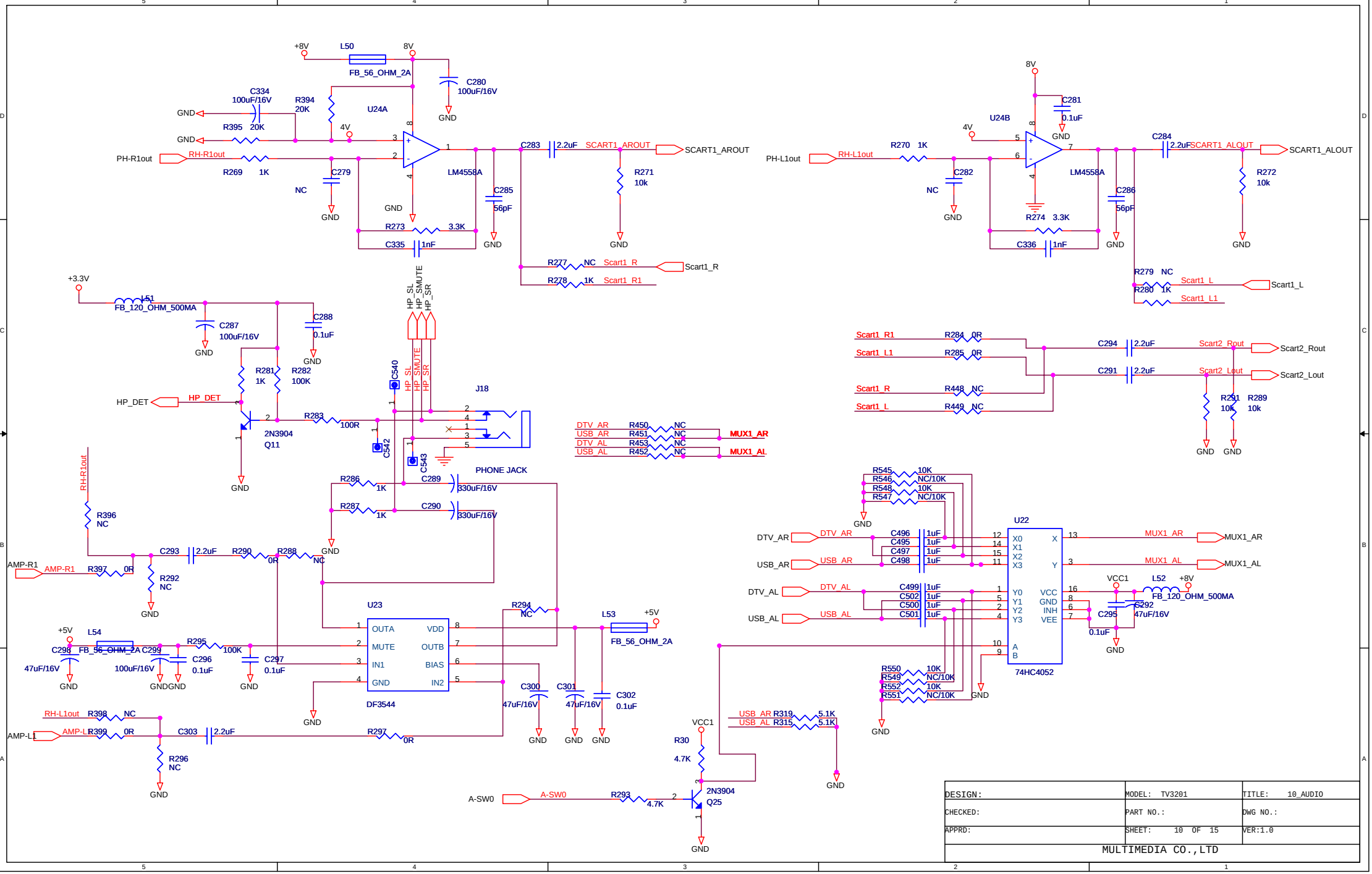
+8V
L50
FB_56_OHM_2A
8V
C280
100uF/16V
GND
C334
100uF/16V
R394
20K
U24A
R395 20K
4V
PH-R1out
RH-R1out
R269 1K
C279
NC
LM4558A
C283 2.2uF
SCART1_AROUT
SCART1_AROUT
R271
10k
C285
56pF
R273 3.3K
C335 1nF
R277 NC Scart1_R
Scart1_R
R278 1K Scart1_R1
PH-L1out
RH-L1out
R270 1K
C282
NC
U24B
C281
0.1uF
LM4558A
C284 2.2uF
SCART1_ALOUT
SCART1_ALOUT
R272
10k
C286
56pF
R274 3.3K
C336 1nF
R279 NC
R280 1K
Scart1_L
Scart1_L
Scart1_L1
+3.3V
L51
FB_120_OHM_500MA
C287
100uF/16V
C288
0.1uF
R281
1K
R282
100K
HP_DET
HP_DET
2N3904
Q11
R283 100R
HP_SL
HP_SMUTE
HP_SR
C540
C542
C543
J18
PHONE JACK
DTV_AR R450 NC
USB_AR R451 NC MUX1_AR
DTV_AL R453 NC
USB_AL R452 NC MUX1_AL
Scart1_R1 R284 0R
Scart1_L1 R285 0R
Scart1_R R448 NC
Scart1_L R449 NC
C294 2.2uF
Scart2_Rout
Scart2_Rout
C291 2.2uF
Scart2_Lout
Scart2_Lout
R291 10k
R289 10k
R286 1K
C289 330uF/16V
R287 1K
C290 330uF/16V
RH-R1out
R396
NC
AMP-R1
AMP-R1
R397 0R
R292
NC
C293 2.2uF
R290 0R
R288 NC
U23
OUTA
MUTE
IN1
GND
VDD
OUTB
BIAS
IN2
DF3544
R294
NC
L53
+5V
FB_56_OHM_2A
+5V
L54
C298 FB_56_OHM_2A C299
47uF/16V
100uF/16V
R295 100K
C296
0.1uF
C297
0.1uF
C300
47uF/16V
C301
47uF/16V
C302
0.1uF
RH-L1out R398 NC
AMP-L1
AMP-L1 R399 0R
C303 2.2uF
R297 0R
R296
NC
R545 10K
R546 NC/10K
R548 10K
R547 NC/10K
DTV_AR
DTV_AR
C496 1uF
C495 1uF
C497 1uF
C498 1uF
USB_AR
USB_AR
DTV_AL
DTV_AL
C499 1uF
C502 1uF
C500 1uF
C501 1uF
USB_AL
USB_AL
U22
X0
X1
X2
X3
Y0
Y1
Y2
Y3
A
B
X
Y
VCC
GND
INH
VEE
74HC4052
MUX1_AR
MUX1_AR
MUX1_AL
MUX1_AL
VCC1
L52
+8V
FB_120_OHM_500MA
C292
47uF/16V
C295
0.1uF
R550 10K
R549 NC/10K
R552 10K
R551 NC/10K
USB_AR R319 5.1K
USB_AL R315 5.1K
VCC1
R30
4.7K
A-SW0
A-SW0
R293 4.7K
2N3904
Q25
DESIGN:
MODEL: TV3201
TITLE: 10_AUDIO
CHECKED:
PART NO.:
DWG NO.:
APPRD:
SHEET: 10 OF 15
VER:1.0
MULTIMEDIA CO.,LTD

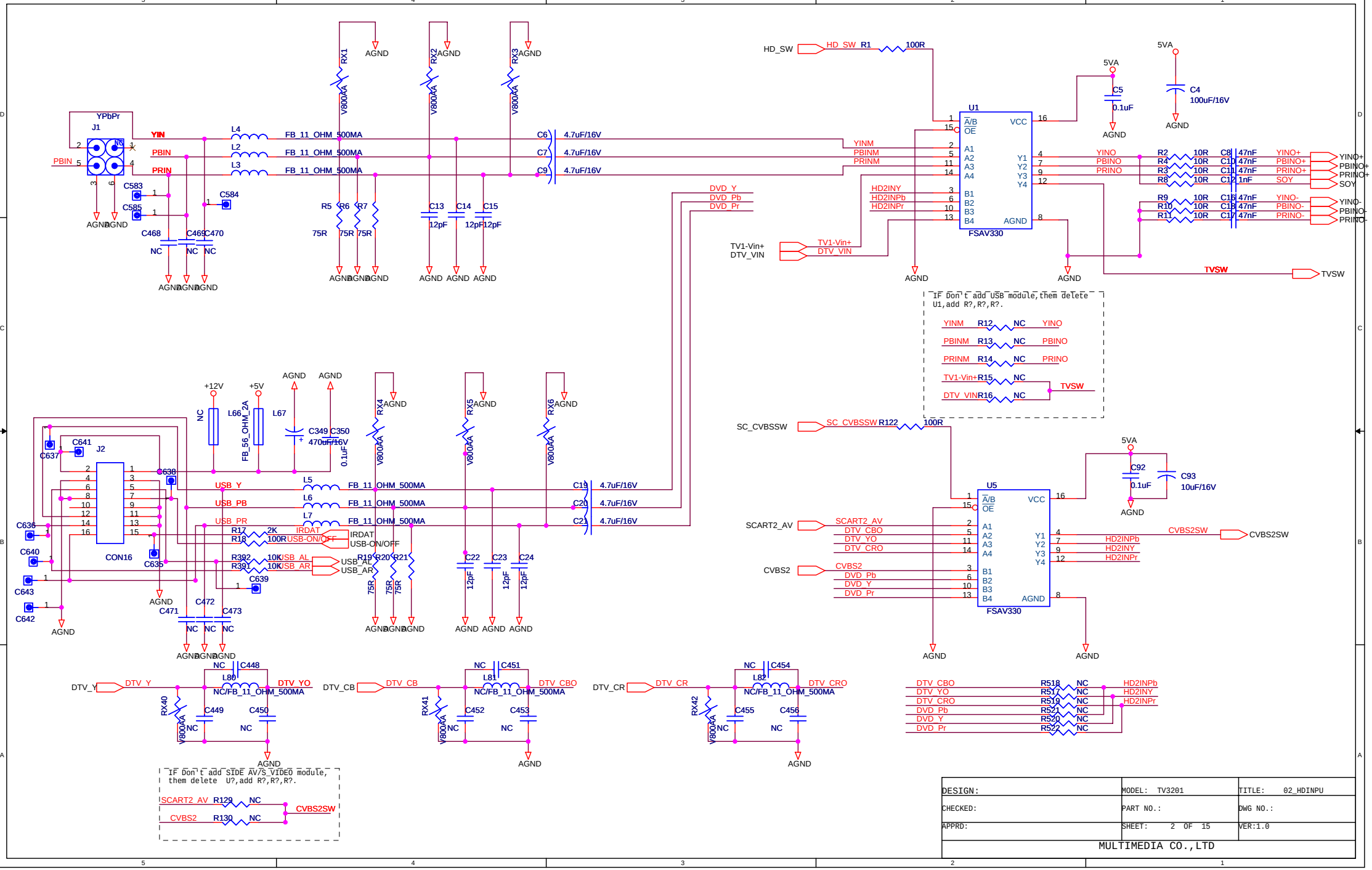

DESIGN:	MODEL: TV3201	TITLE: 02_HDINPU
CHECKED:	PART NO.:	DWG NO.:
APPRD:	SHEET: 2 OF 15	VER:1.0

MULTIMEDIA CO.,LTD

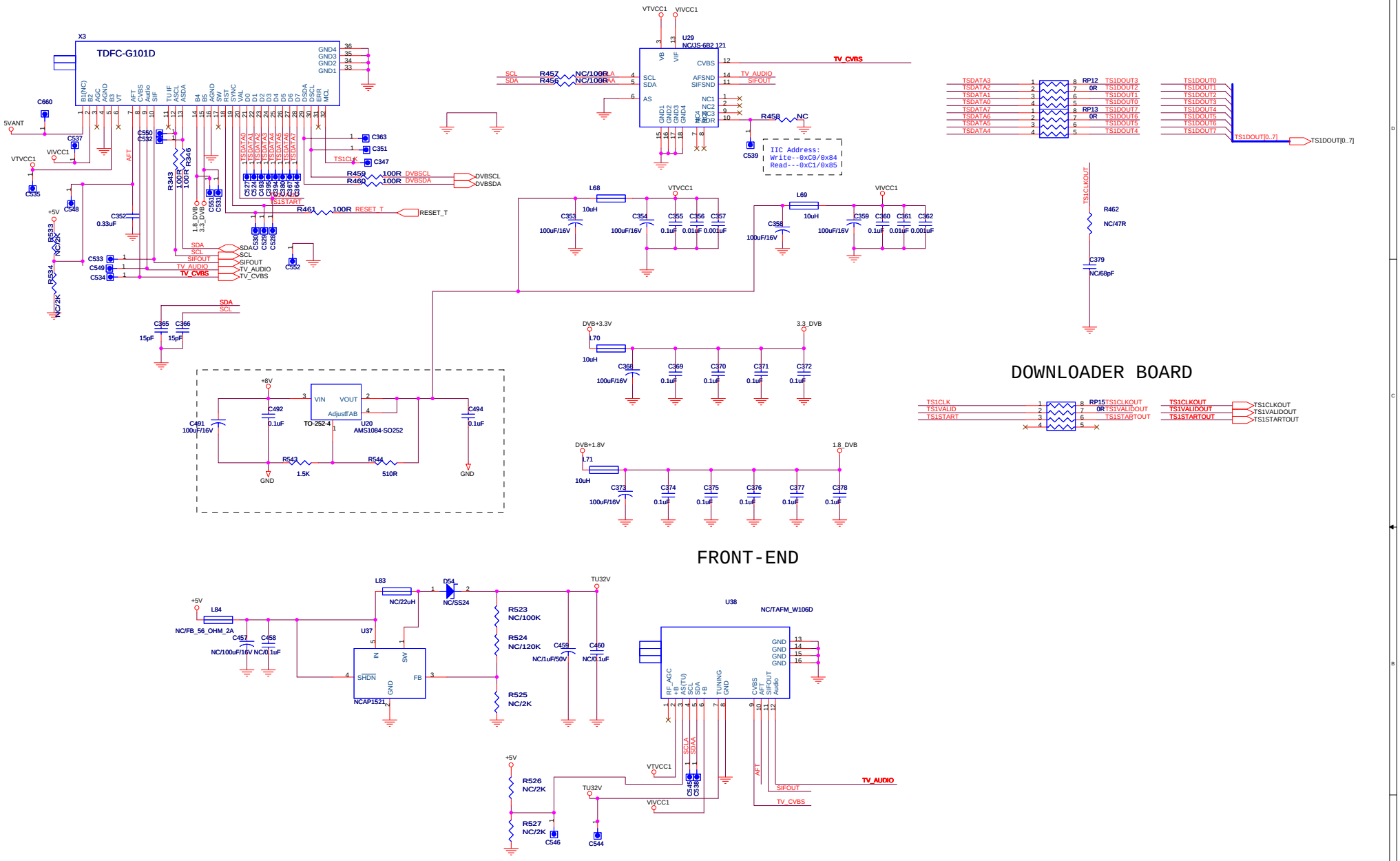

DESIGN:	MODEL: TV3201	TITLE: 13_TUNER_INTERFACE
CHECKED:	PART NO.:	DWG NO.:
APPRD:	SHEET: 13 OF 15	VER:1.0

MULTIMEDIA CO.,LTD

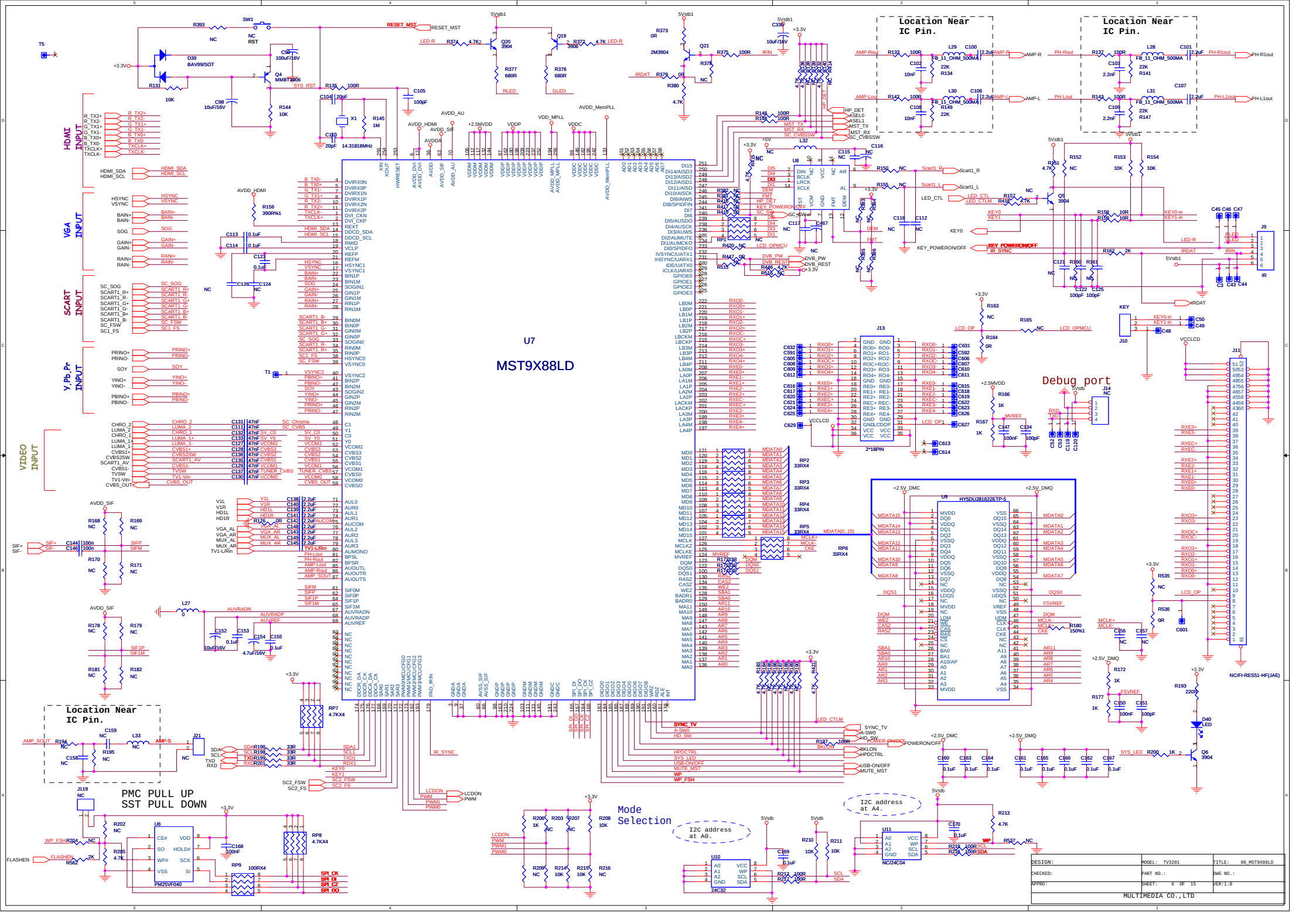
U7
MST9X88LD
HDMI INPUT
VGA INPUT
SCART INPUT
Y,Pb,Pr INPUT
VIDEO INPUT
Location Near IC Pin.
Location Near IC Pin.
Debug port
PMC PULL UP
SST PULL DOWN
Mode Selection
I2C address at A0.
I2C address at A4.
DESIGN:
MODEL: TV3201
TITLE: 06_MST9X88LD
CHECKED:
PART NO.:
DWG NO.:
APPRD:
SHEET: 6 OF 15
VER:1.0
MULTIMEDIA CO.,LTD

CVBS1+S_Video1 Input

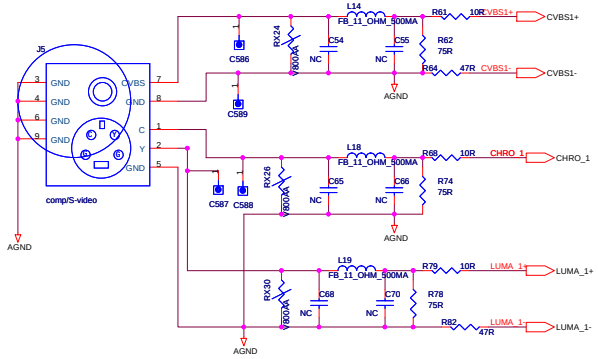

SCART1(AV+RGB) Input

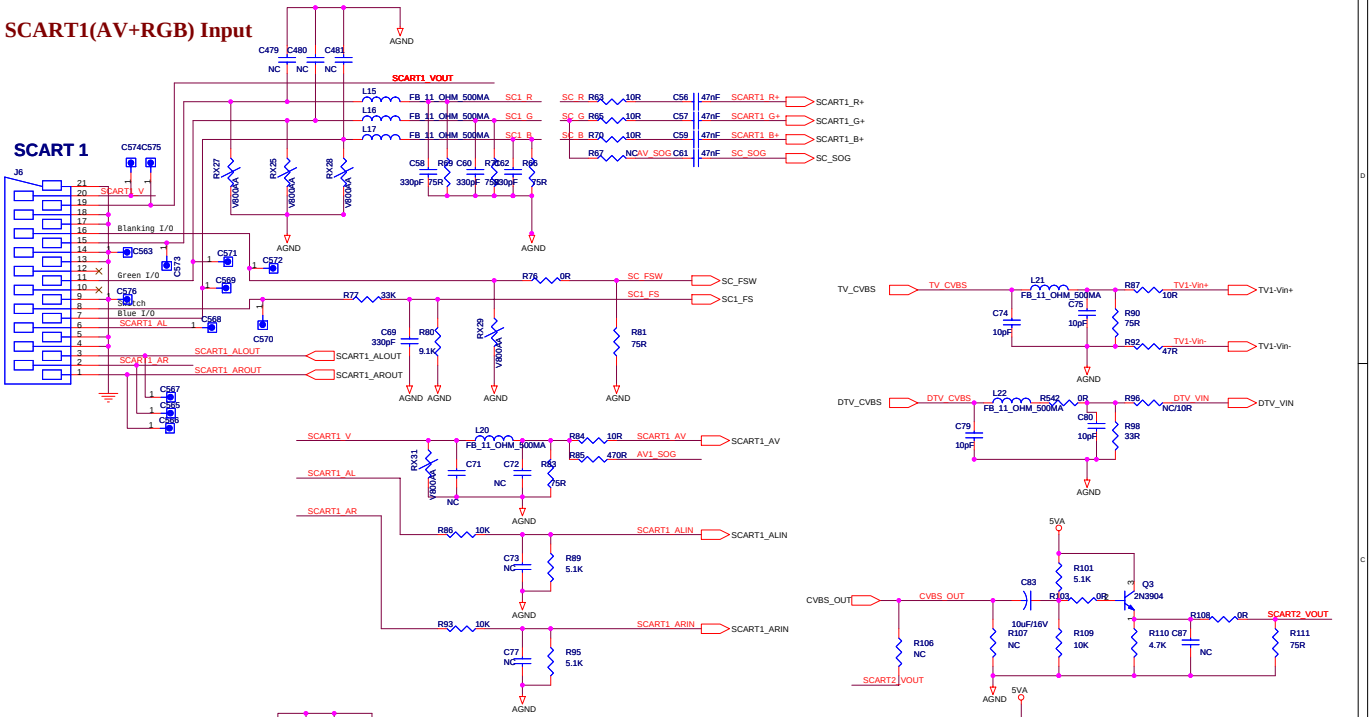

SIDE CVBS2+S_Video2 Input

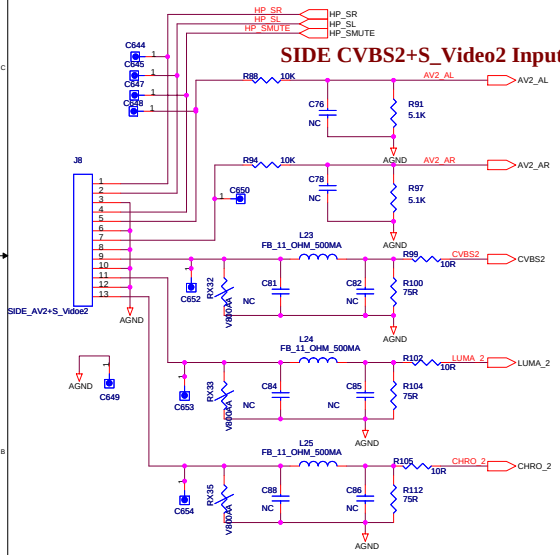

SCART2(AV) Input

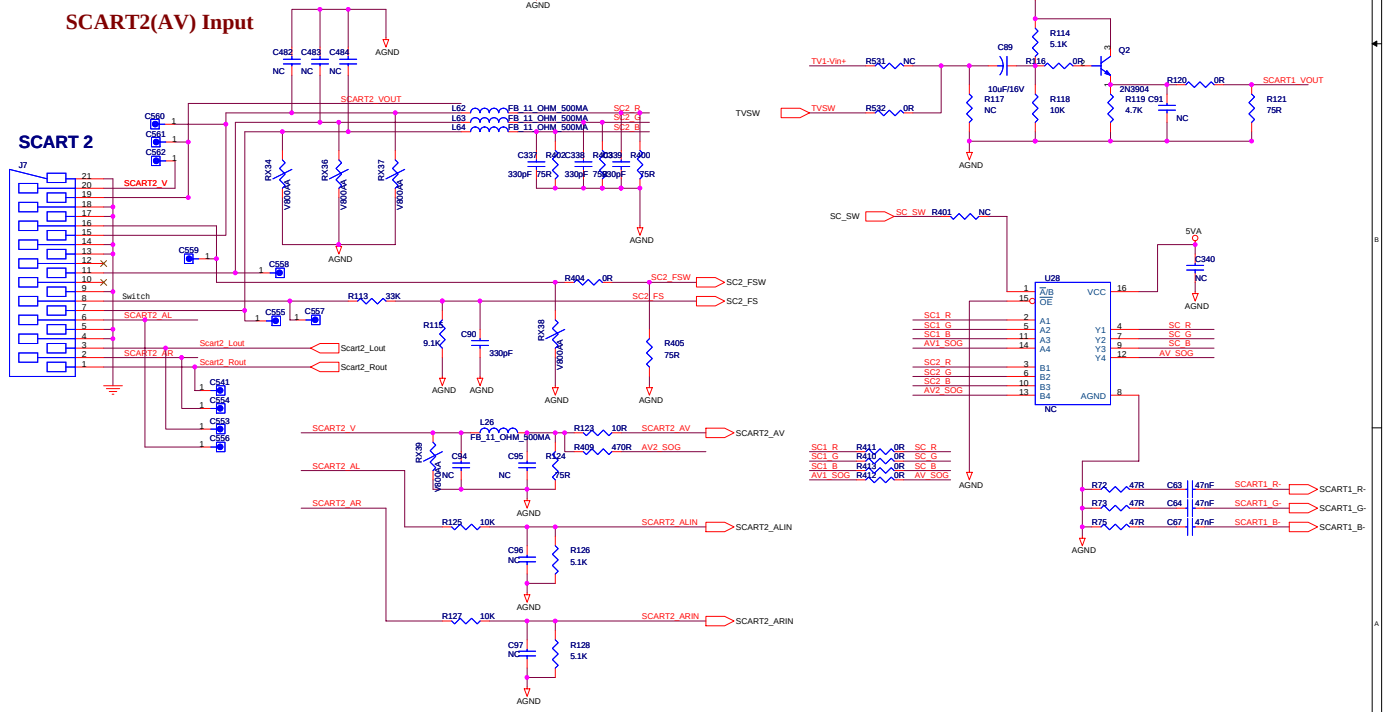

DESIGN:	MODEL: TV3201	TITLE: 05_AVINPUT
CHECKED:	PART NO.:	DWG NO.:
APPRD:	SHEET: 5 OF 15	VER:1.0
MULTIMEDIA CO.,LTD		

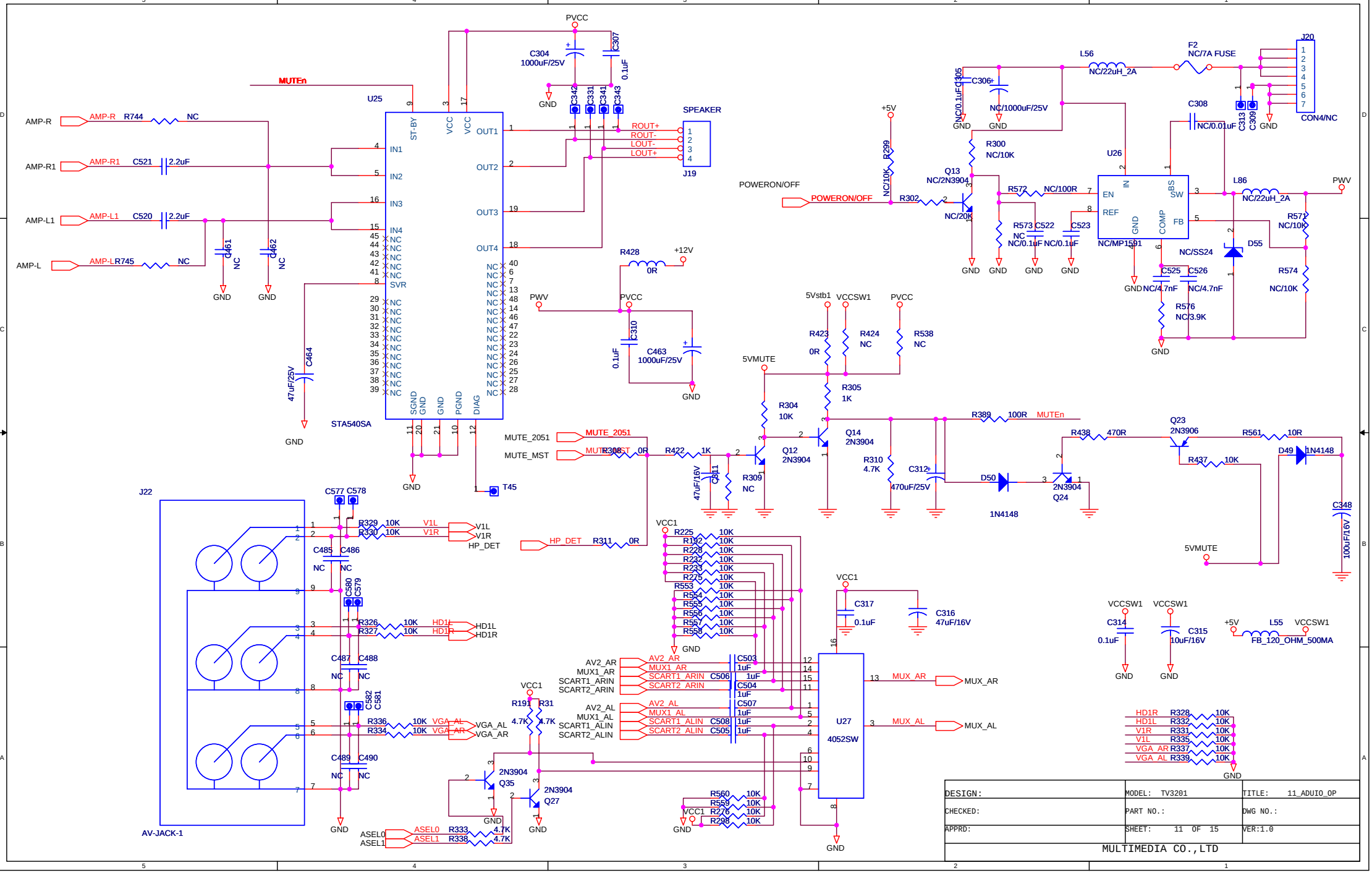
U25
STA540SA
MUTEn
AMP-R
AMP-R1
AMP-L1
AMP-L
R744 NC
C521 2.2uF
C520 2.2uF
R745 NC
C461 NC
C462 NC
C464 47uF/25V
PVCC
C304 1000uF/25V
C307 0.1uF
C342 C331 C341 C343
SPEAKER
J19
ROUT+
ROUT-
LOUT-
LOUT+
R428 0R
+12V
PWV
C310 0.1uF
C463 1000uF/25V
POWERON/OFF
R299 NC/10K
+5V
R302 NC/20K
Q13 NC/2N3904
R300 NC/10K
C306 NC/1000uF/25V
C305 NC/0.1uF
L56 NC/22uH_2A
F2 NC/7A FUSE
J20
CON4/NC
C308 NC/0.01uF
C313 C309
U26
NC/MP1591
R572 NC/100R
R573 NC/0.1uF
C522 NC/0.1uF
C523 NC/0.1uF
L86 NC/22uH_2A
D55 NC/SS24
R571 NC/10K
R574 NC/10K
C525 NC/4.7nF
C526 NC/4.7nF
R576 NC/3.9K
5Vstb1
VCCSW1
R423 0R
R424 NC
R538 NC
R305 1K
5VMUTE
R304 10K
Q14 2N3904
Q12 2N3904
R309 NC
R310 4.7K
C312 470uF/25V
R389 100R
MUTEn
D50 1N4148
Q24 2N3904
R438 470R
Q23 2N3906
R437 10K
R561 10R
D49 1N4148
C348 100uF/16V
MUTE_2051
MUTE_MST
R308 0R
R422 1K
C311 47uF/16V
HP_DET
R311 0R
T45
J22
AV-JACK-1
C577 C578
R329 10K
R330 10K
V1L
V1R
HP_DET
C485 NC
C486 NC
C580 C579
R326 10K
R327 10K
HD1L
HD1R
C487 NC
C488 NC
C582 C581
R336 10K
R334 10K
VGA_AL
VGA_AR
C489 NC
C490 NC
R191 4.7K
R31 4.7K
Q35 2N3904
Q27 2N3904
ASEL0
ASEL1
R333 4.7K
R338 4.7K
R225 10K
R192 10K
R228 10K
R232 10K
R233 10K
R275 10K
R553 10K
R554 10K
R555 10K
R556 10K
R557 10K
R558 10K
AV2_AR
MUX1_AR
SCART1_ARIN
SCART2_ARIN
AV2_AL
MUX1_AL
SCART1_ALIN
SCART2_ALIN
C503 1uF
C506 1uF
C504 1uF
C507 1uF
C508 1uF
C505 1uF
U27
4052SW
MUX_AR
MUX_AL
C317 0.1uF
C316 47uF/16V
C314 0.1uF
C315 10uF/16V
L55 FB_120_OHM_500MA
HD1R R328 10K
HD1L R332 10K
V1R R331 10K
V1L R335 10K
VGA_AR R337 10K
VGA_AL R339 10K
R560 10K
R559 10K
R276 10K
R298 10K
GND
DESIGN:
MODEL: TV3201
TITLE: 11_ADUIO_OP
CHECKED:
PART NO.:
DWG NO.:
APPRD:
SHEET: 11 OF 15
VER:1.0
MULTIMEDIA CO.,LTD

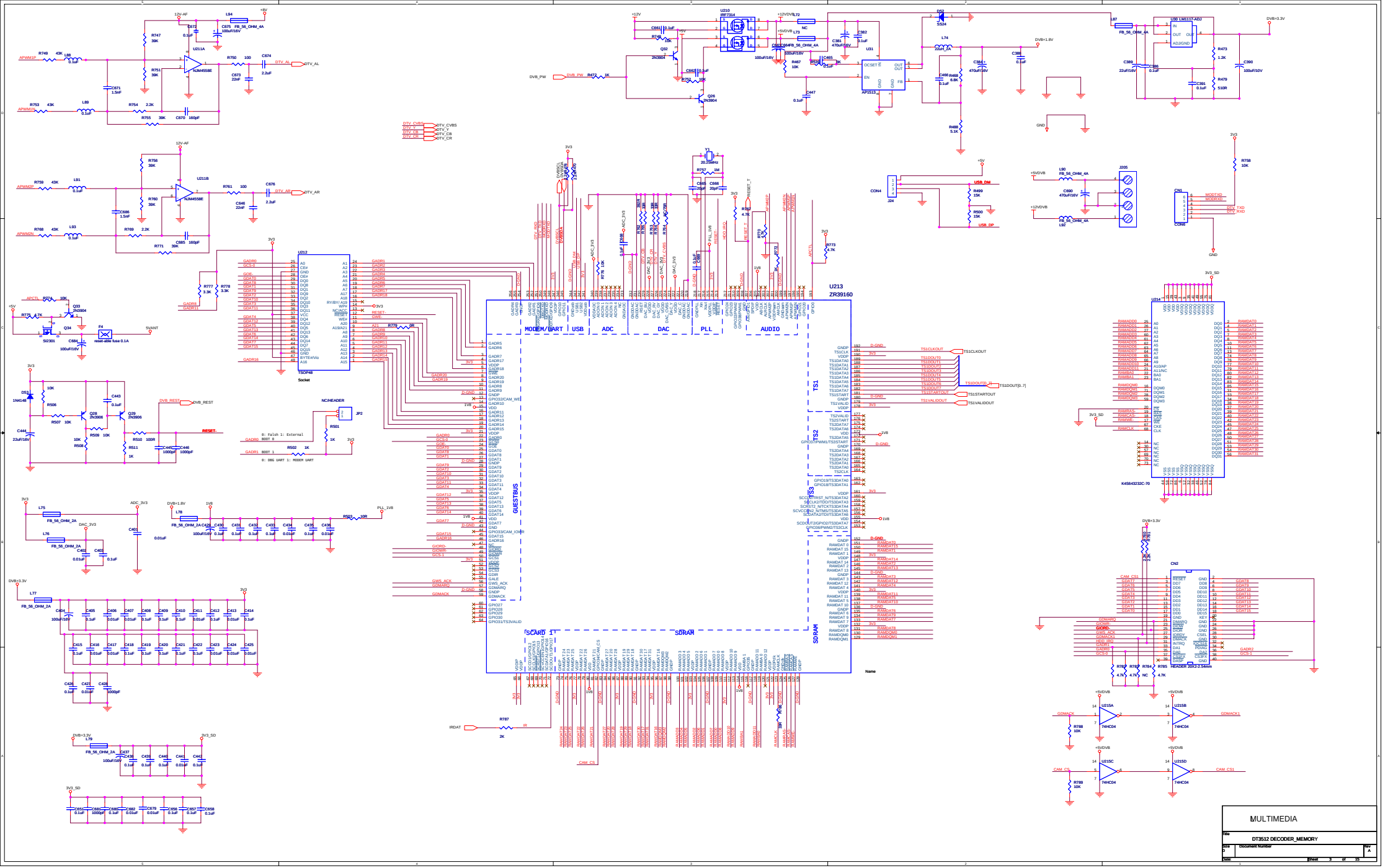
MODEM/UART
USB
ADC
DAC
PLL
AUDIO
GUESTBUS
SDRAM
SCARD 1
U212
TSOP48
Socket
U213
ZR39160
TS1
TS2
TS3
SDRAM
U214
K4S643232C-70
CN2
HEADER 20/2-2.54mm
U211A
U211B
NJM4558E
U210
IRF7314
U31
AP1513
U30 LM1117-ADJ
Q32
2N3904
Q26
2N3904
Q28
2N3906
Q29
2N3906
Q33
2N3904
Q34
SI2301
F4
reset-able fuse 0.1A
J24
CON4
J205
CN1
CON8
Name
MULTIMEDIA
DT3512 DECODER_MEMORY
Size
D
Document Number
Rev
A
Date:
Sheet 3 of 15

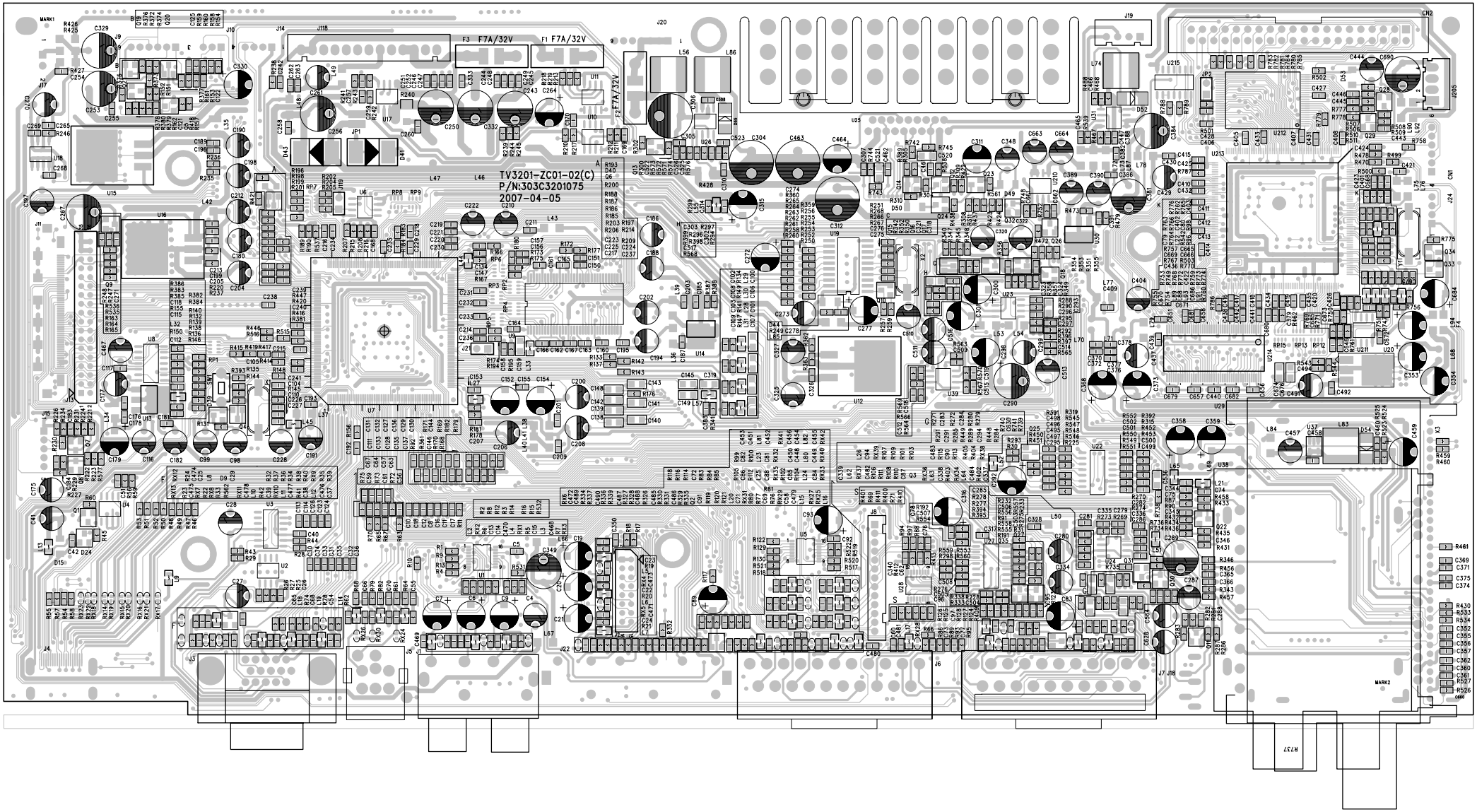
TV3201-ZC01-02(C)
P/N:303C3201075
2007-04-05
F3 F7A/32V
F1 F7A/32V
F2 F7A/32V
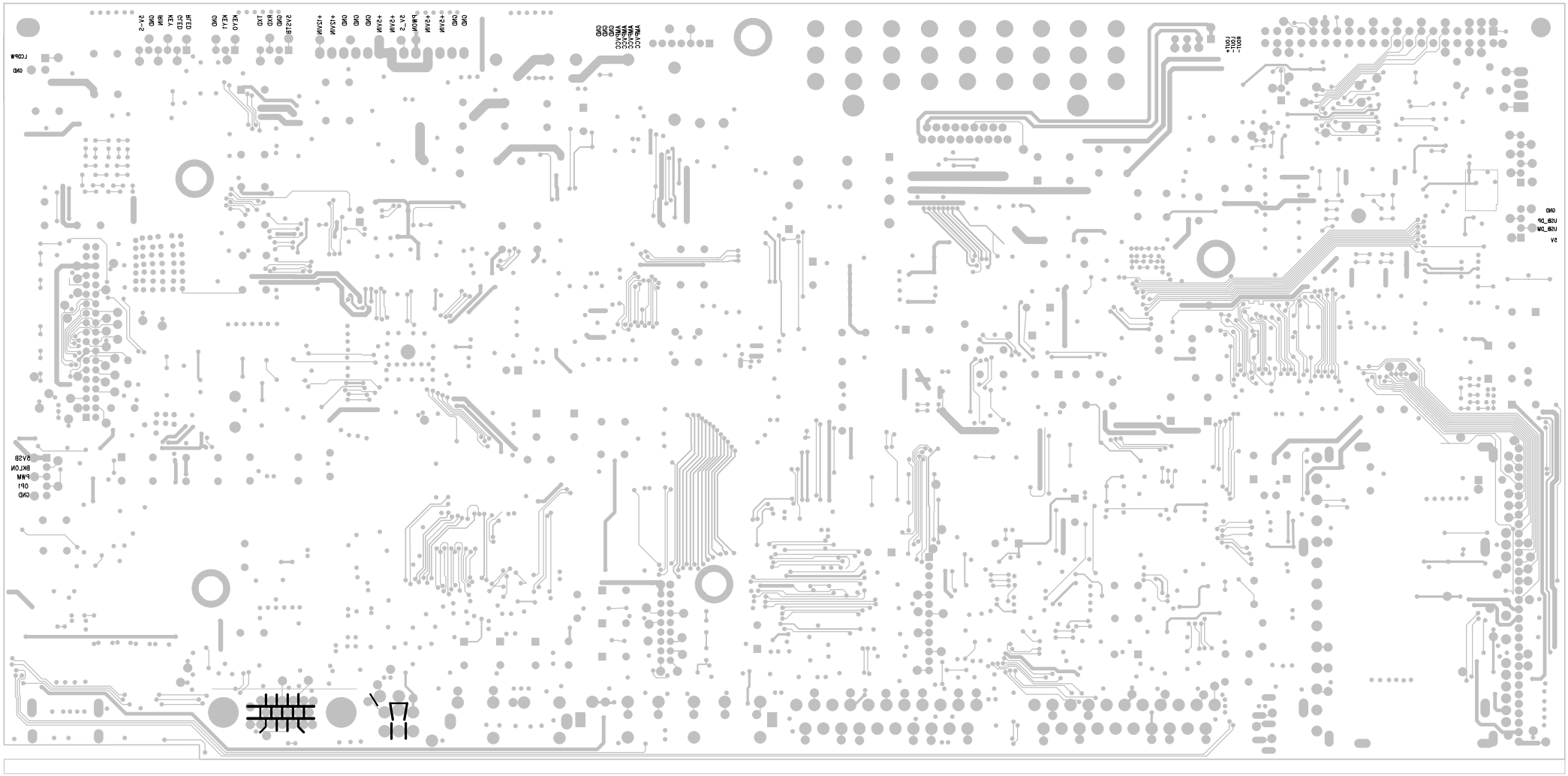
TV3201-ZC01-02(C).pcb - Sat Sep 29 16:57:32 2007